FLUSSO
LUXURY PLUMBING FIXTURES

Serie 250™

250.2000 | 8" Widespread 3-Hole Faucet

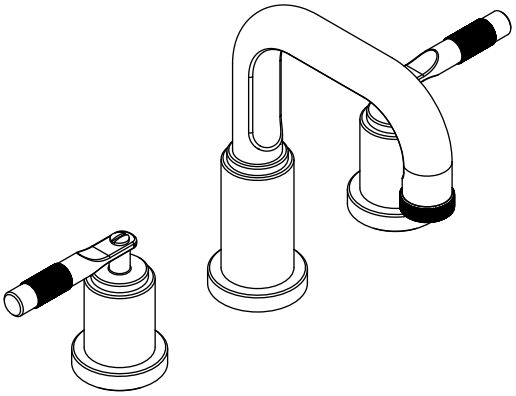

Drain Included

SPECIFICATIONS:

- Solid Brass construction
- Three Hole Installation
- 1.2 GPM Flow Rate
- Ceramic disc cartridge allows volume control

STANDARDS:

- ASME A112.18.1 / CSA B125.1, NSF-61

FLOW
Efficient

Technical Diagram

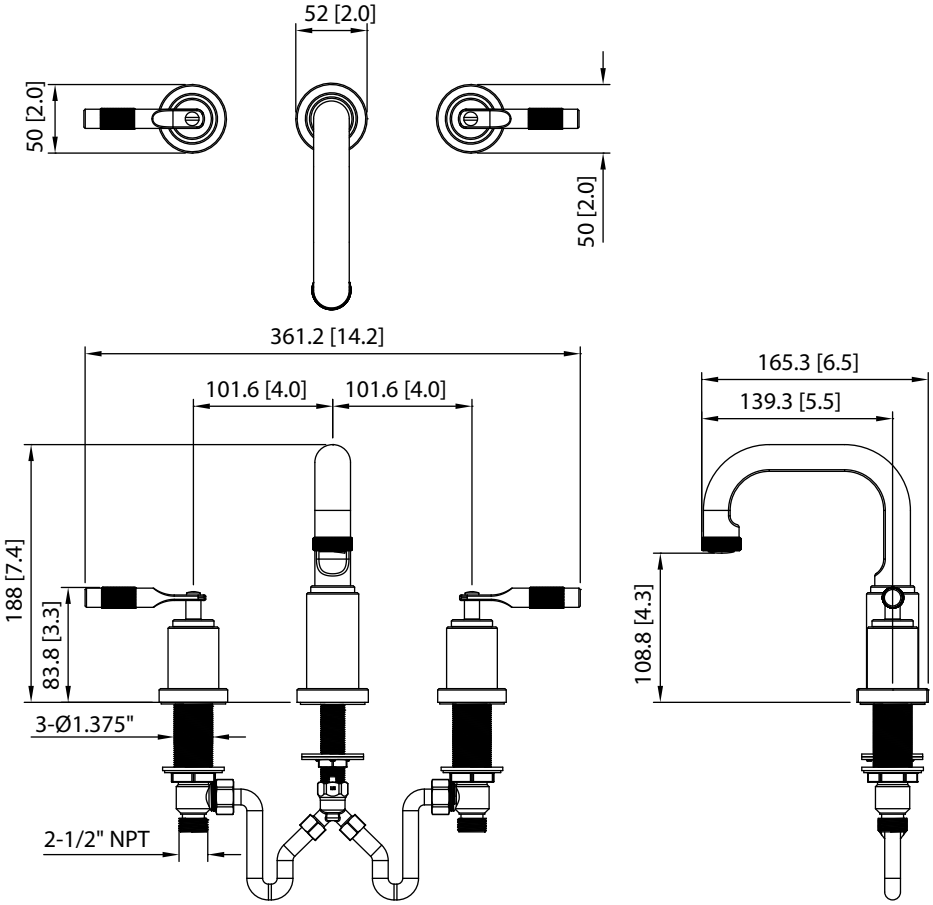

Critical Dimensions in [mm] Inches - Ver. 2.54