HS8007- Wall Elbow With Holder Installation
Installation Manual

FLUSSO
LUXURY PLUMBING FIXTURES

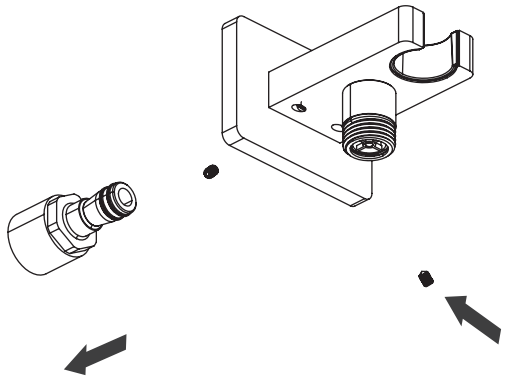

2. Remove female slide on connector [FEM.5505] from trim.

1. Loosen Hex screw using 1.5mm Allen key.

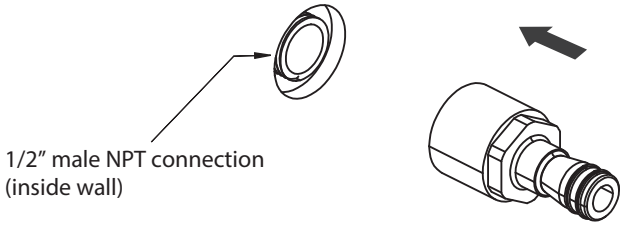

3. Tighten FEM.5505 into wall 1/2" male connector

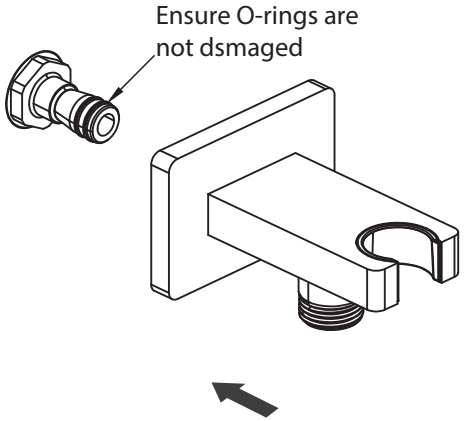

4. Once fem.5505 is secured into the wall slide on trim and tighten hex screws.

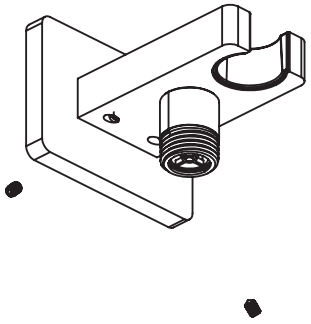

5. Tighten Hex screw to secure trim onto FEM.5505/wall - use 1.5mm Allen key

Ver 2.54