HS8004-Wall Elbow With Holder Installation

Installation Manual

FLUSSO
LUXURY PLUMBING FIXTURES

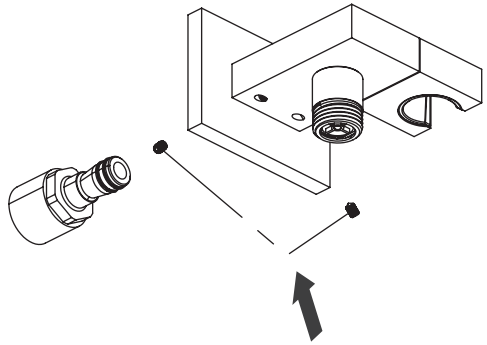

2. Remove female slide on connector [FEM.5505] from trim.

1. Loosen Hex screw using 1.5mm allen key.

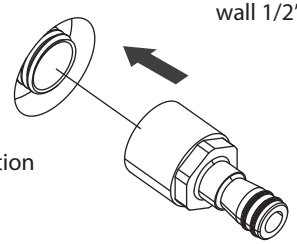

3. Tighten FEM.5505 into wall 1/2″ male connector

1/2″ Male NPT connection (inside wall)

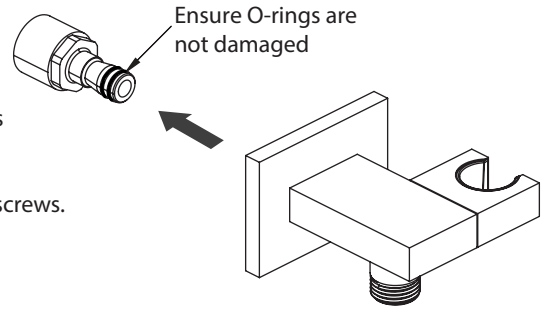

Ensure O-rings are not damaged

4. Once FEM.5505 is secured into the wall slide on trim and tighten hex screws.

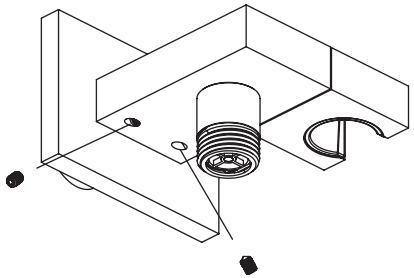

5. Tighten Hex screws to secure trim onto FEM.5505 / wall. - use 1.5mm Allen key