FLUSSO
LUXURY PLUMBING FIXTURES

# Installation Manual - WLM.1900

## 1/2" Wall Mount Valve With 2- Handles

**Use With Trims Ending in *1900 / *1950 / *2450**

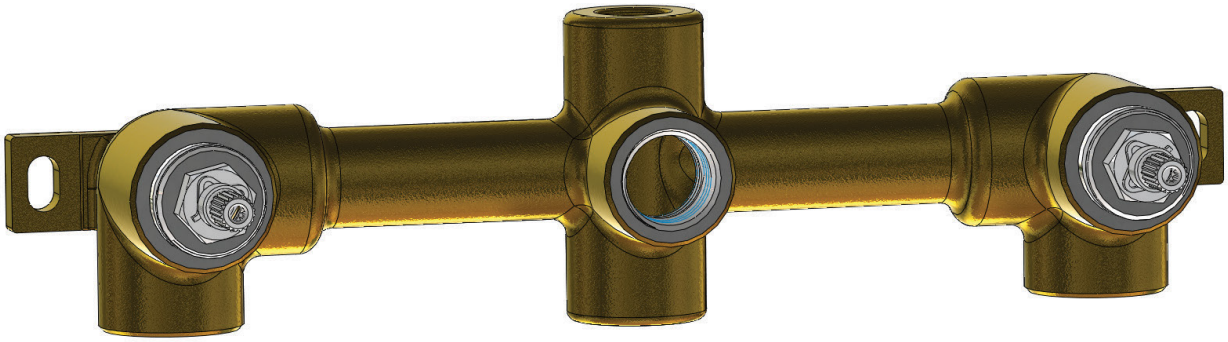

### BEFORE YOU BEGIN

- You must observe all local plumbing laws and codes.
- Do not install this valve if it does not meet local plumbing codes.
- Shut off the main water supply.

Ver. 2.53

FLUSSO
LUXURY PLUMBING FIXTURES

## TABLE OF CONTENTS


- Operating Specifications . . . . . 1
- Valve Installation And Tolerance
    - Cut-Out Dimensions . . . . . 1
    - **Rough In Specification** . . . . . 2
- Connecting The Supply & Output Lines . . . . . 3
- Flushing The Valve / Replacing Volume Control Cartridge . . . 4
- Installing The Trim . . . . . 5
- Installing The Extension Kit . . . . . 8
- Cartridge Maintenance . . . . . 9


## NOTICE TO HOMEOWNER

- We recommend that this product is installed by a qualified professional plumber.
- Please check this product immediately to ensure that it has not been damaged and is complete. Before installation, please make sure this product is the correct model and you have all the parts required for installation and use.
- Please flush the water system to ensure that no metal swarf, solder, and other impurities can enter the product.
- Turn off water supply before commencing work.
- Please read these instructions carefully and retain for future reference.

FLUSSO
LUXURY PLUMBING FIXTURES

## OPERATING SPECIFICATIONS

### WATER TEMPERATURE

This product is to be used with water at a temperature range of 40˚F - 120˚F ONLY!

### WATER PRESSURE

This product is to be used with a water pressure range of 15 PSI to 80 PSI ONLY

If water pressure is greater than 80 PSI install a pressure reducing valve (PRV)

This valve meets or exceeds ANSI A112.18.1 and ASSE 1016

This valve is certified by IAPMO

## CUT OUT DIMENSIONS

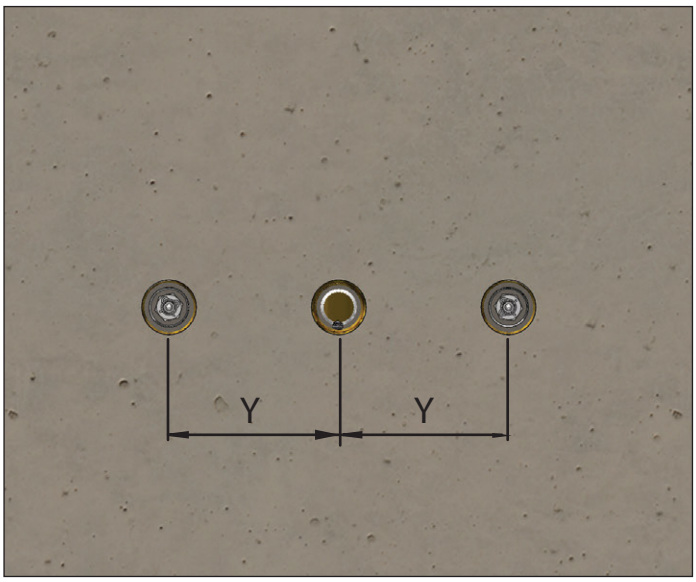


Isenberg's wall mount two handle lavatory valves does not come with a mud guard.
It is essential to review the cut-out dimensions shown on the left so that the proper hole sizes are cut-out in the finished tile.

Wall Cut Out Dimensions
From **Center Point** of Valve:

**WLM.1900**
3 equal holes of 1.3" /33 mm
Y = 102mm / 4.2"

## ROUGH IN SPECIFICATION

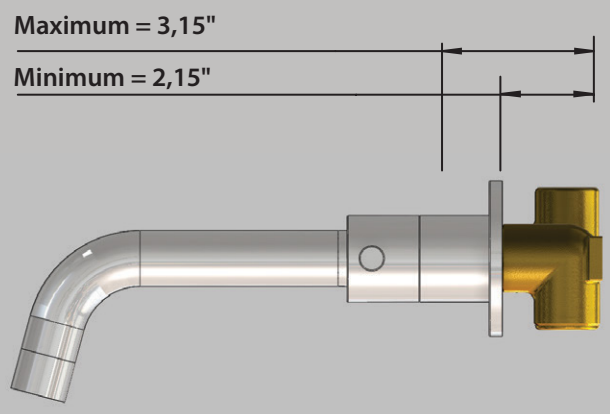


The distance between back of the valve to the finished tile surface should be between 2.15″ and 3.15″ inches.

If valve is installed too deep into the wall, extensions are available.

## CONNECTING THE SUPPLY & OUTPUT LINES

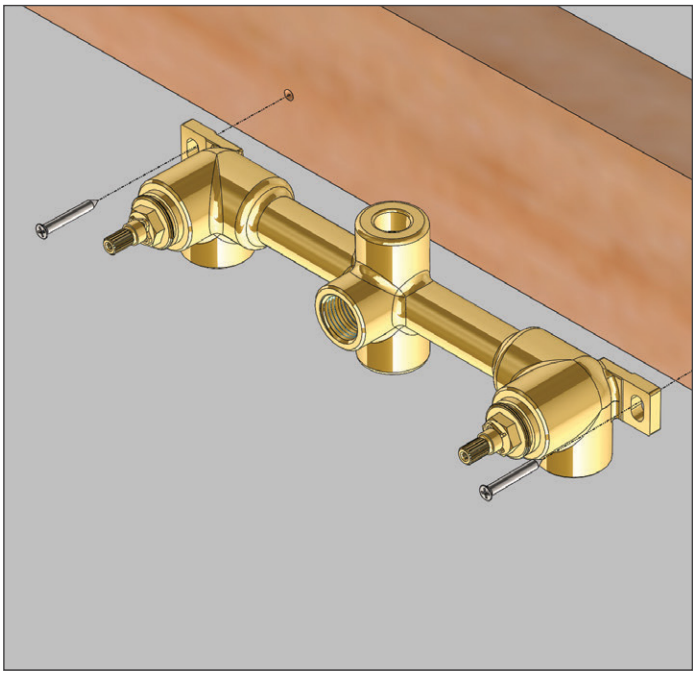

Fix Valve on wooden plank

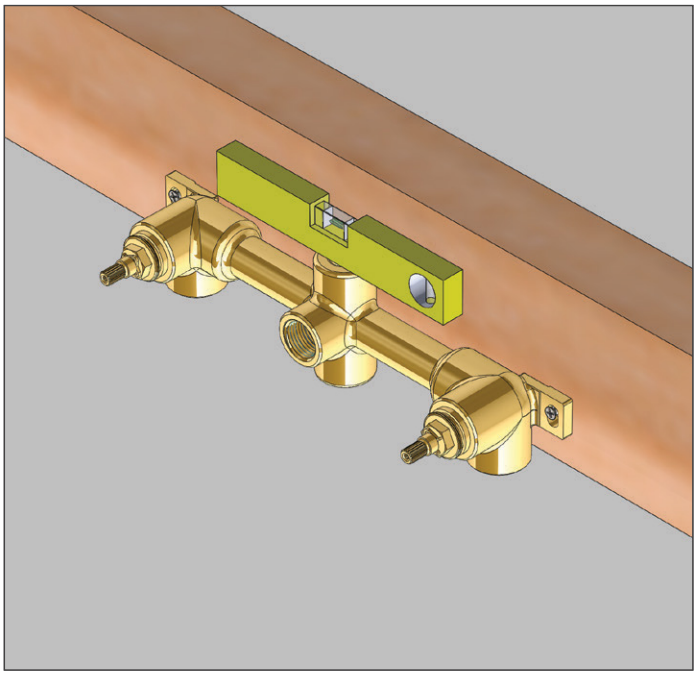

Level Valve

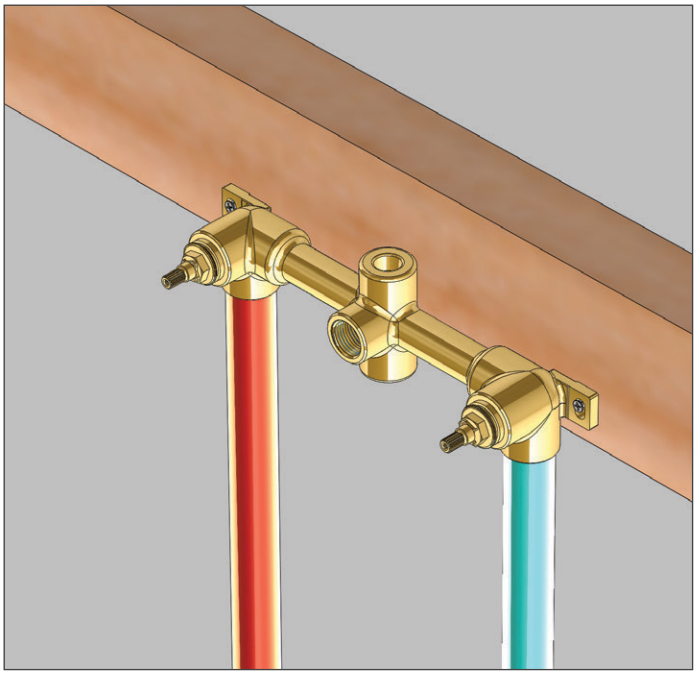

Attach Hot/Cold Supply Lines

## FLUSHING THE VALVE / REPLACING THE VOLUME CARTRIDGE

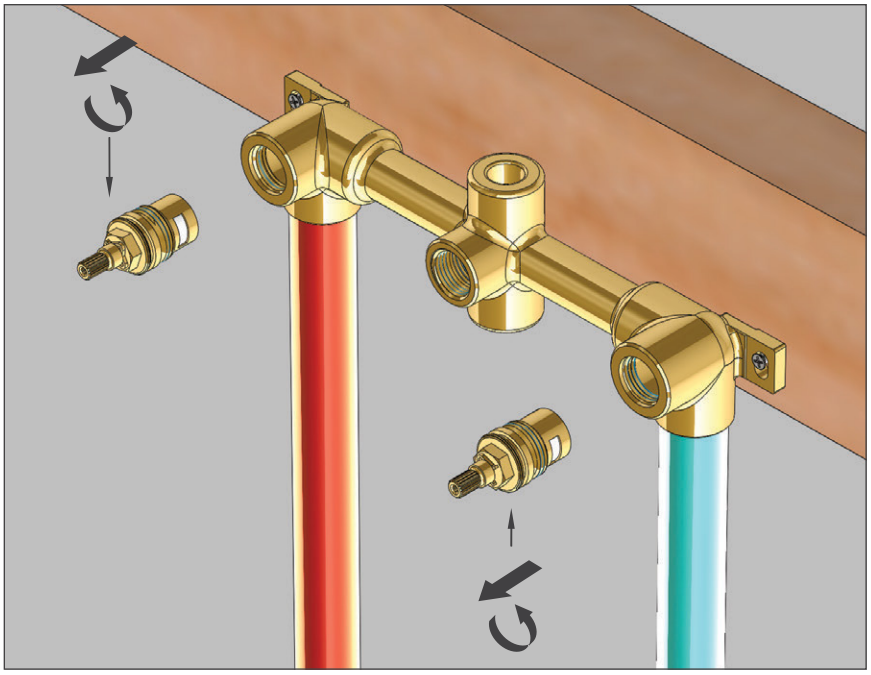

In order to clear dirt in the lines - you must flush the valve before the wall is closed and water is turned on for the first time.

1) Remove volume control cartridge by turning with a spanner

4) Turn on water supply and let water flow removing any dirt in the lines.

## INSTALLING THE TRIM - TRIM PLATE SIZE AND SHAPE MAY VARY - ILLUSTRATION ONLY

Insert stem extension on hot and cold handle and secure using provided screws

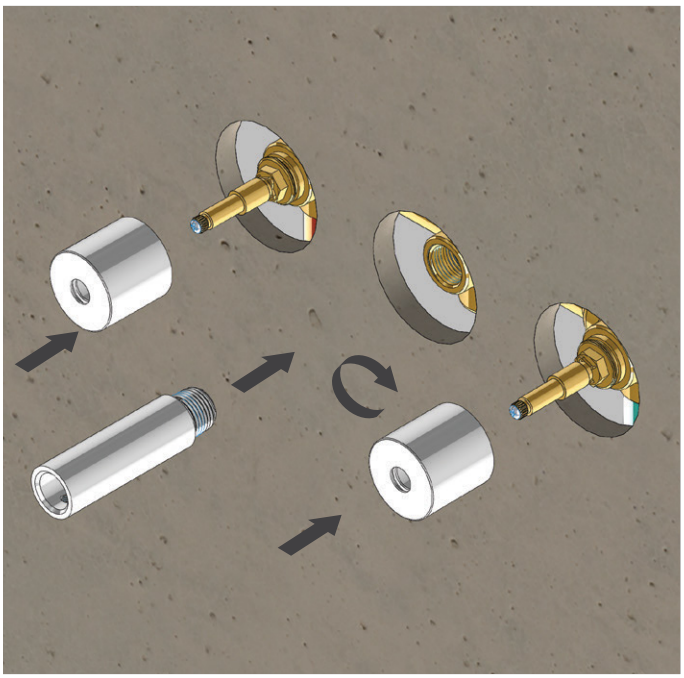

Insert handle circular trims and output spout connector

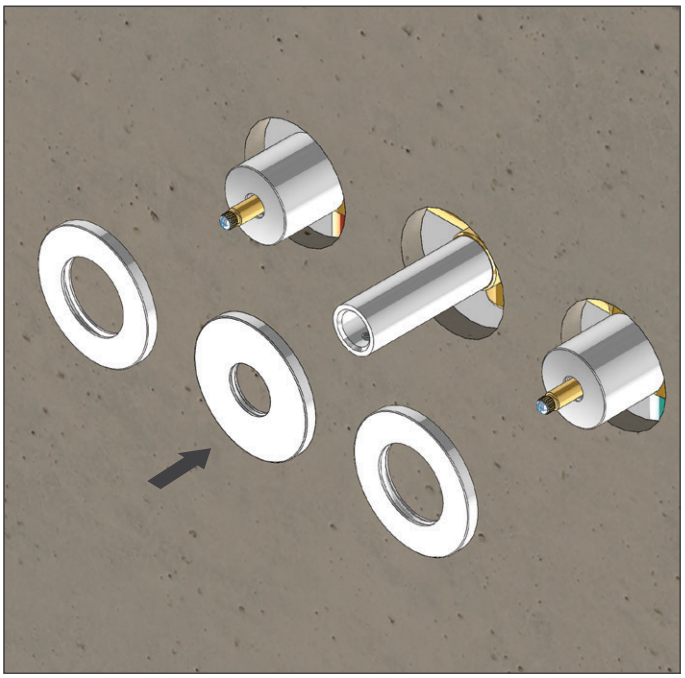

Insert flange

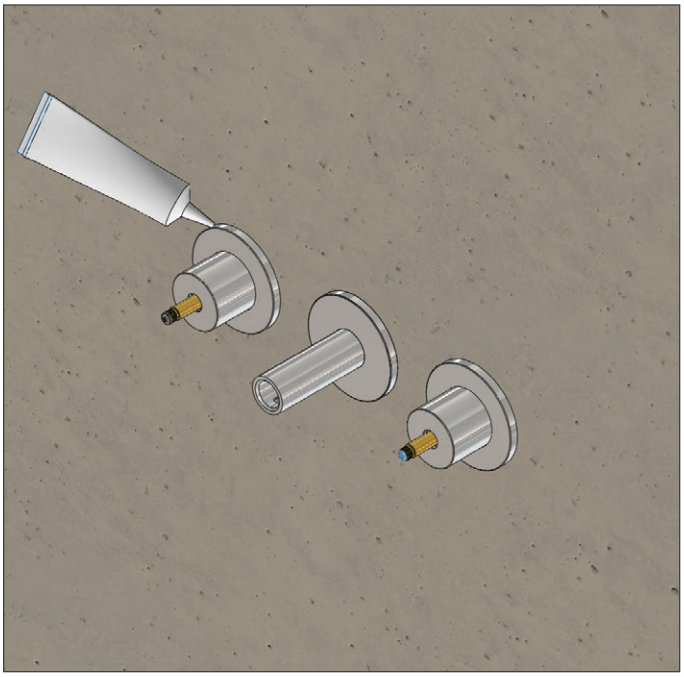

Secure with a small amount of clear silicone on the back end of the flange

## INSTALLING THE TRIM - TRIM PLATE SIZE AND SHAPE MAY VARY - ILLUSTRATION ONLY

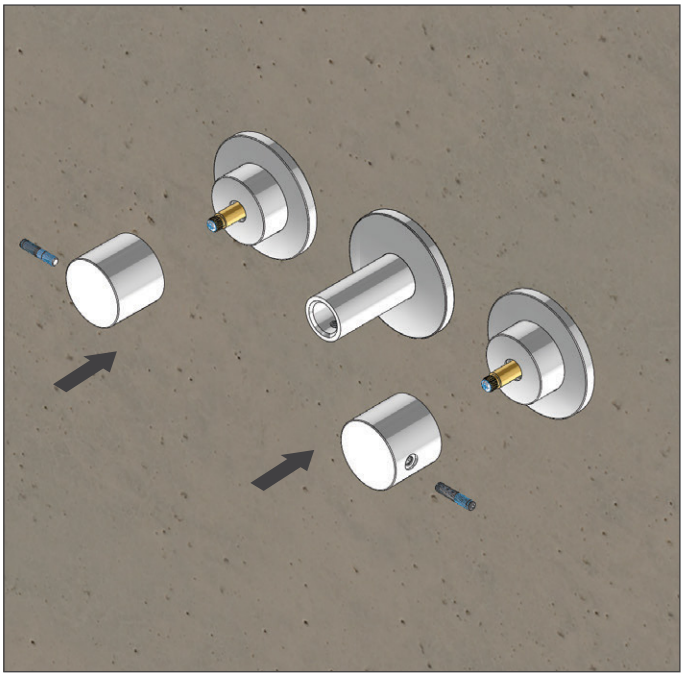

Insert handle and long hex screw

Tighten long hex screw to secure handle

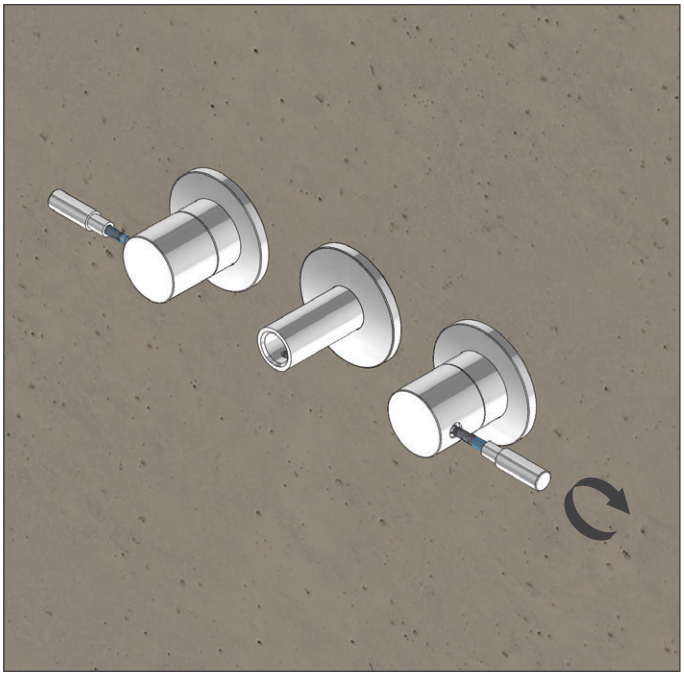

Insert handle rod and tighten

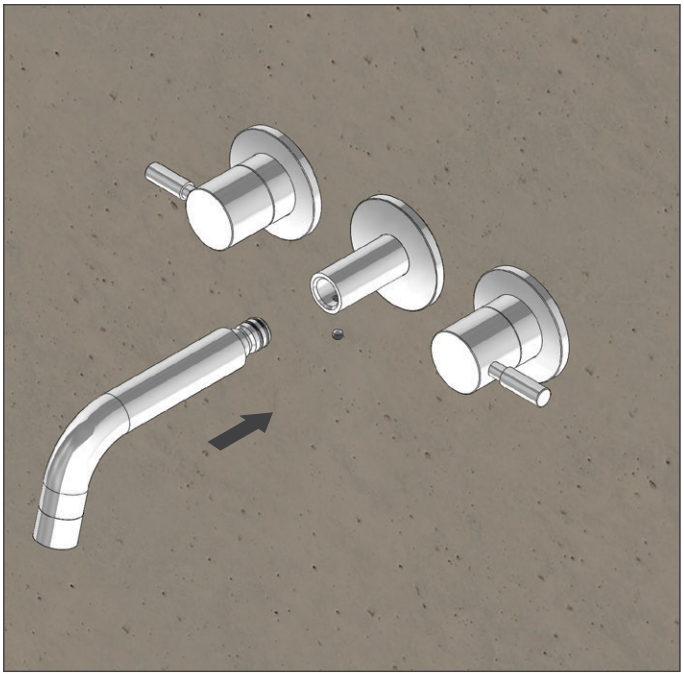

Insert spout

## INSTALLING THE TRIM - TRIM PLATE SIZE AND SHAPE MAY VARY - ILLUSTRATION ONLY

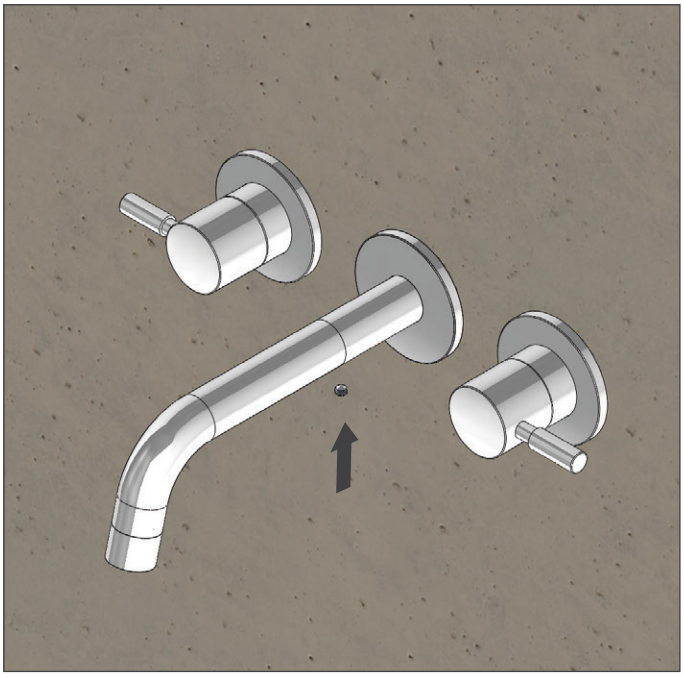

Tighten hex screw to secure spout

This photo shows a completely installed trim

## INSTALLING EXTENSIONS TO THE VALVE - OPTIONAL

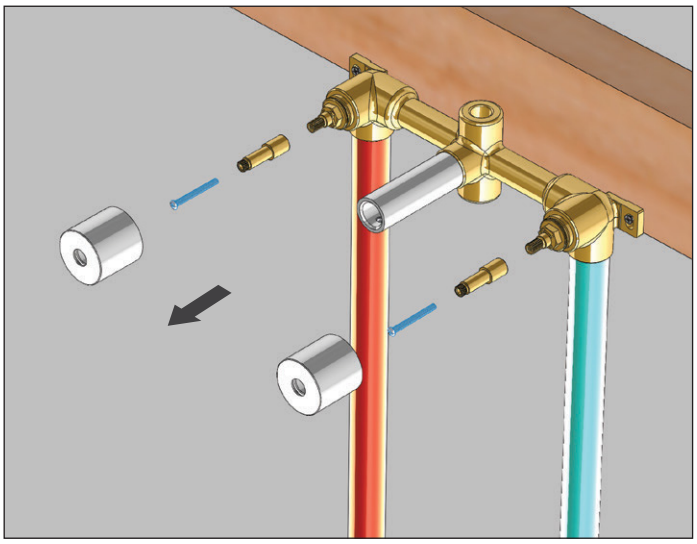

Remove existing handles and trim on handles

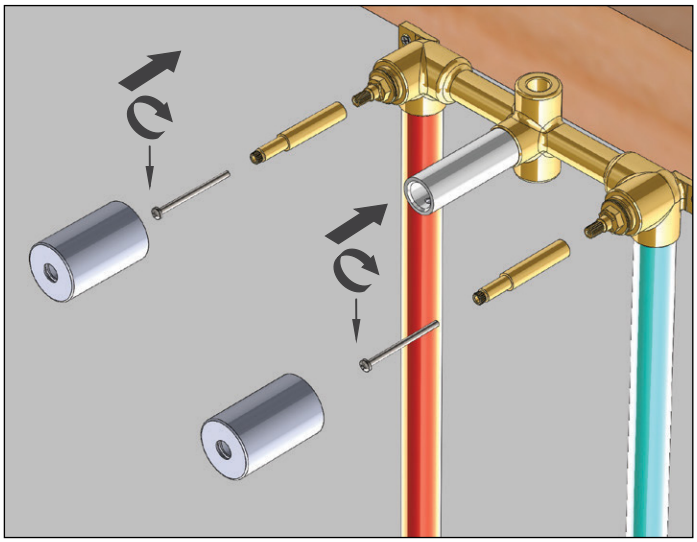

Install volume stem extension kit, tighten screws and then install longer trim piece

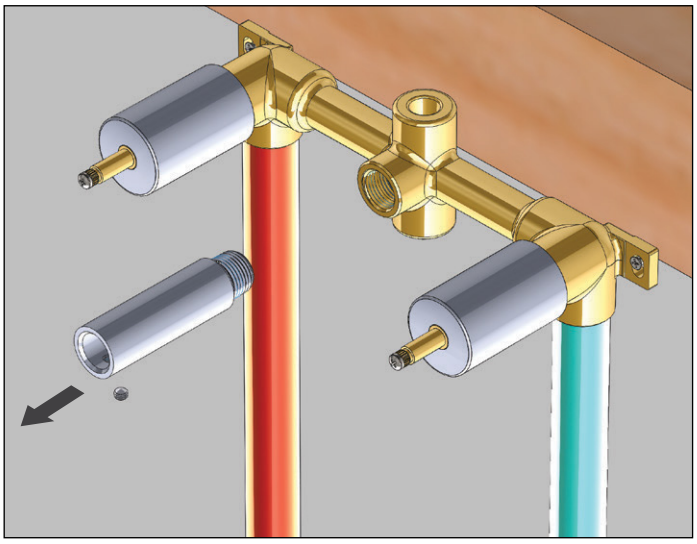

Remove existing spout piece

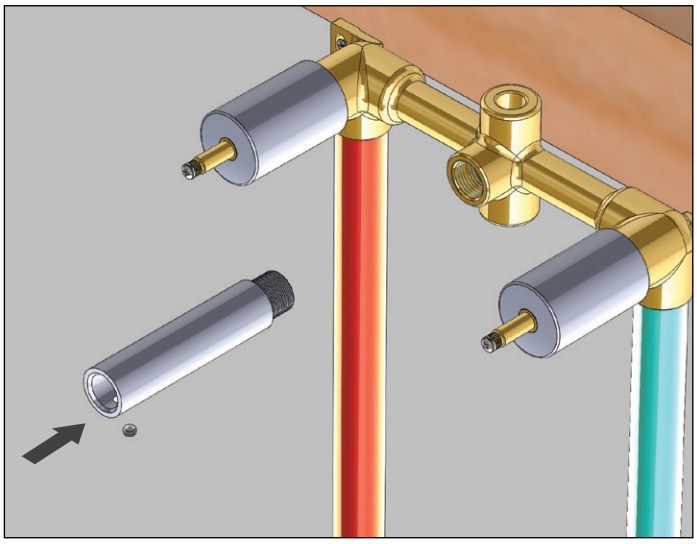

Insert longer spout extension piece

## INSTALLING EXTENSIONS TO THE VALVE - OPTIONAL

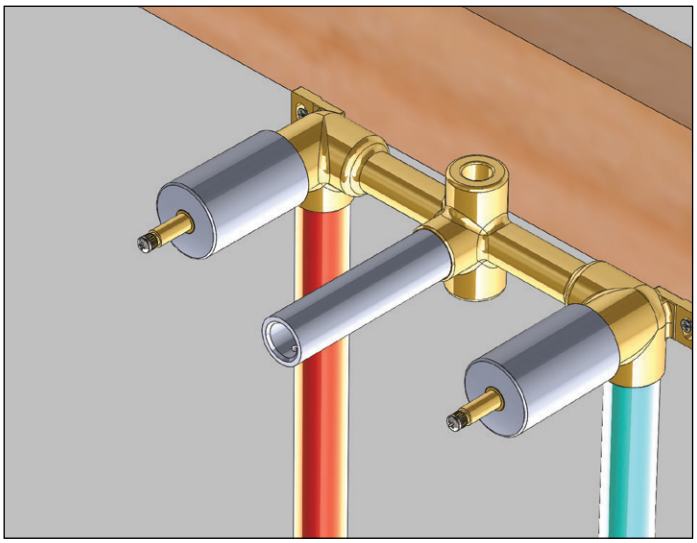

All extension trim pieces installed shown in this illustration

## CARTRIDGE CLEANING & MAINTENANCE

**Volume Control Cartridge:**
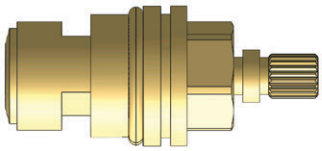
Check For Dirt →