230.8006- Wall Elbow With Holder Instalaation
Installation Manual

isenberg
innovation+design

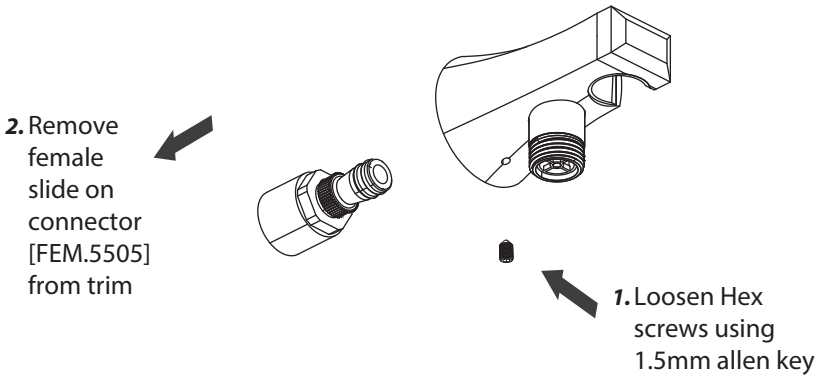

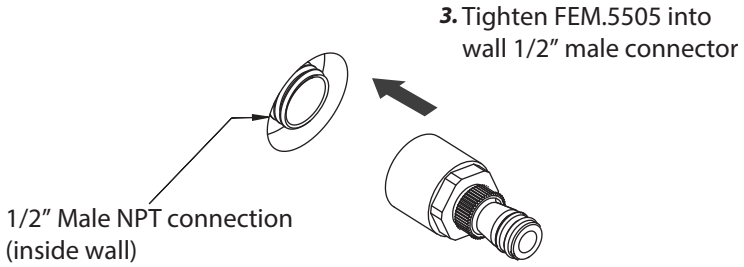

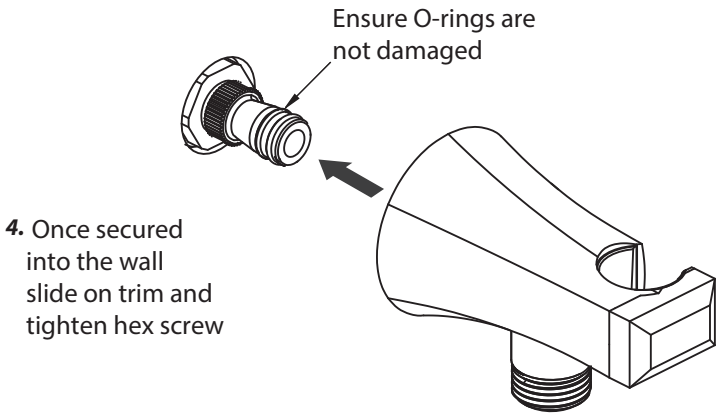

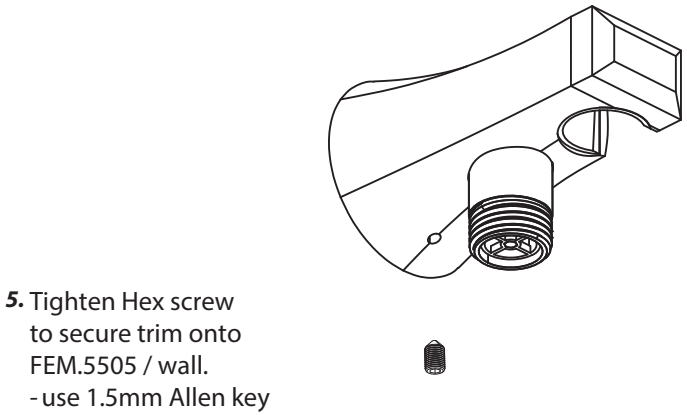

Ver 2.53